VOLTAGE output configuration and connecting with MOD-8AO by RS485 Modbus.

1. Open **MOD-8AO**:

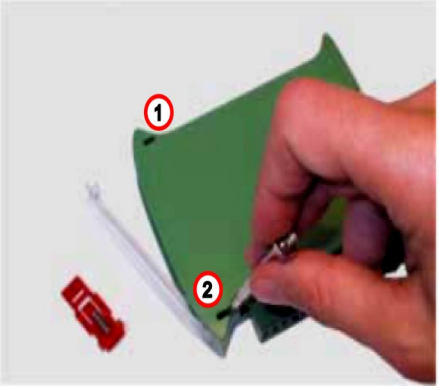

2. Set jumpers to **Voltage** outputs. The channel with voltage output must have shorted jumpers marked as voltage "**V**"

Location of the jumpers

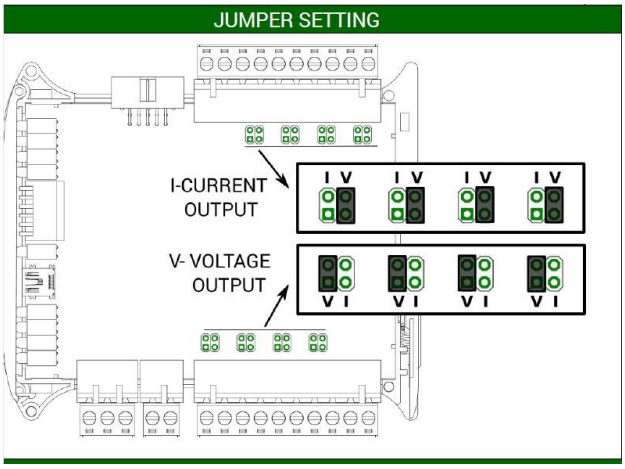

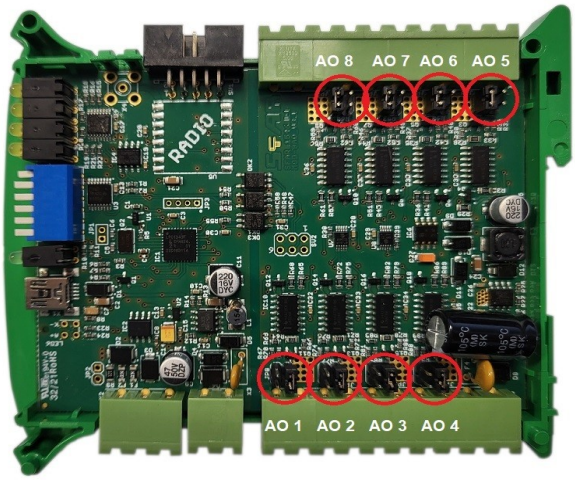

View of the shorted jumpers in the "V" position

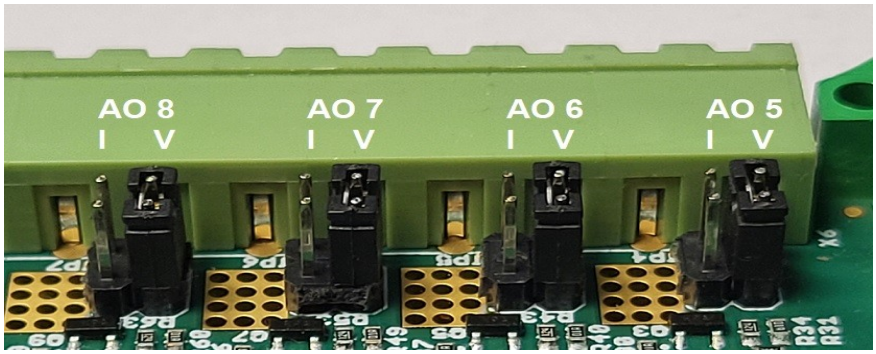

3. Close **MOD-8AO**

4. Connect
   A. power supply:

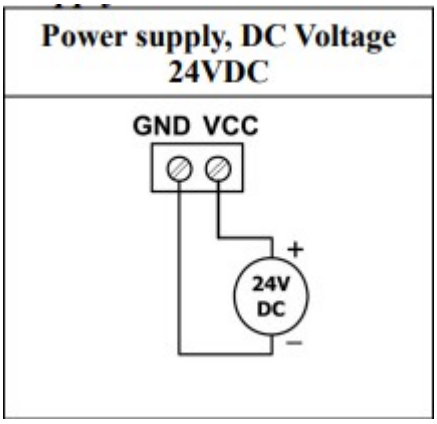

   B. power supply of analog outputs

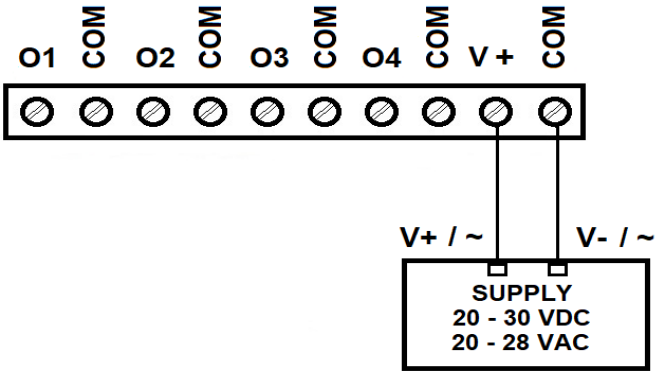

5. Connect MOD-8AO by USB cable to IO Configurator and set type of output.

Link to download:
https://www.aspar.com.pl/katalogi/IOMODULES/KONFIGURATOR/software/Konfigurator_IO.zip

The IO Configurator allows to set one type of voltage outputs:

- 0 VDC to 10 VDC Register value - range: 0 - 10000

<u>Examples</u>

mode 0-10VDC	register value: 0	output value: 0 VDC
mode 0-10VDC	register value: 3500	output value: 3,5 VDC
mode 0-10VDC	register value: 7200	output value: 7,2 VDC
mode 0-10VDC	register value: 10000	output value: 10 VDC

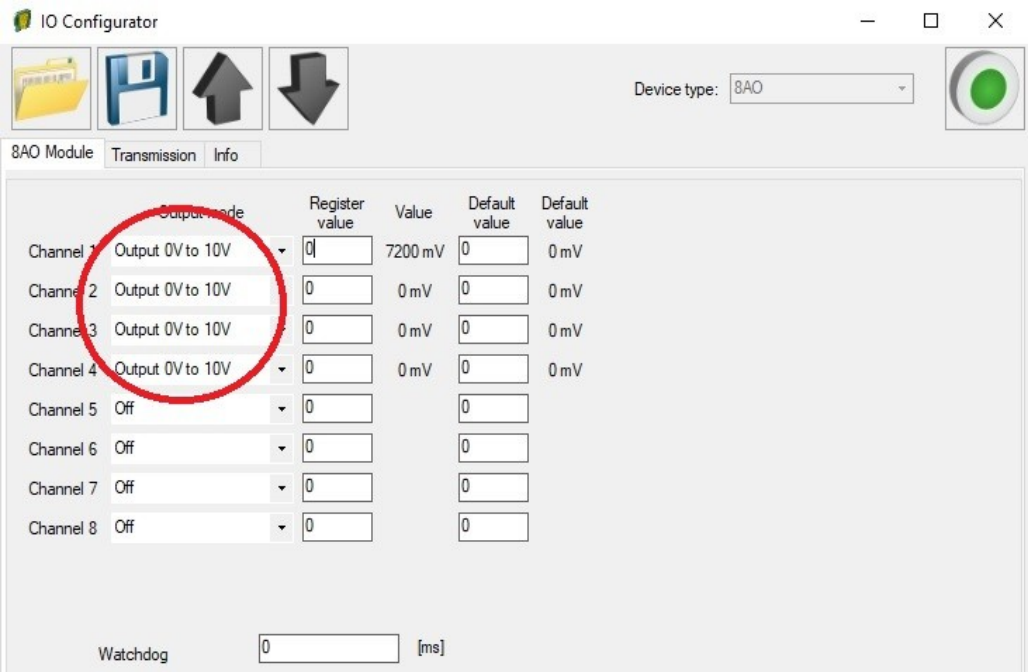

6. Set 6,4VDC on channel 1 using IO Configurator. Channel 1 is configured as 0-10VDC. The range of register is: 0-10000. This means that the register value should be **6400** to get **6,4VDC** at the analog output.

mode 0-10VDC register value: 6400 output value: 6,4 VDC

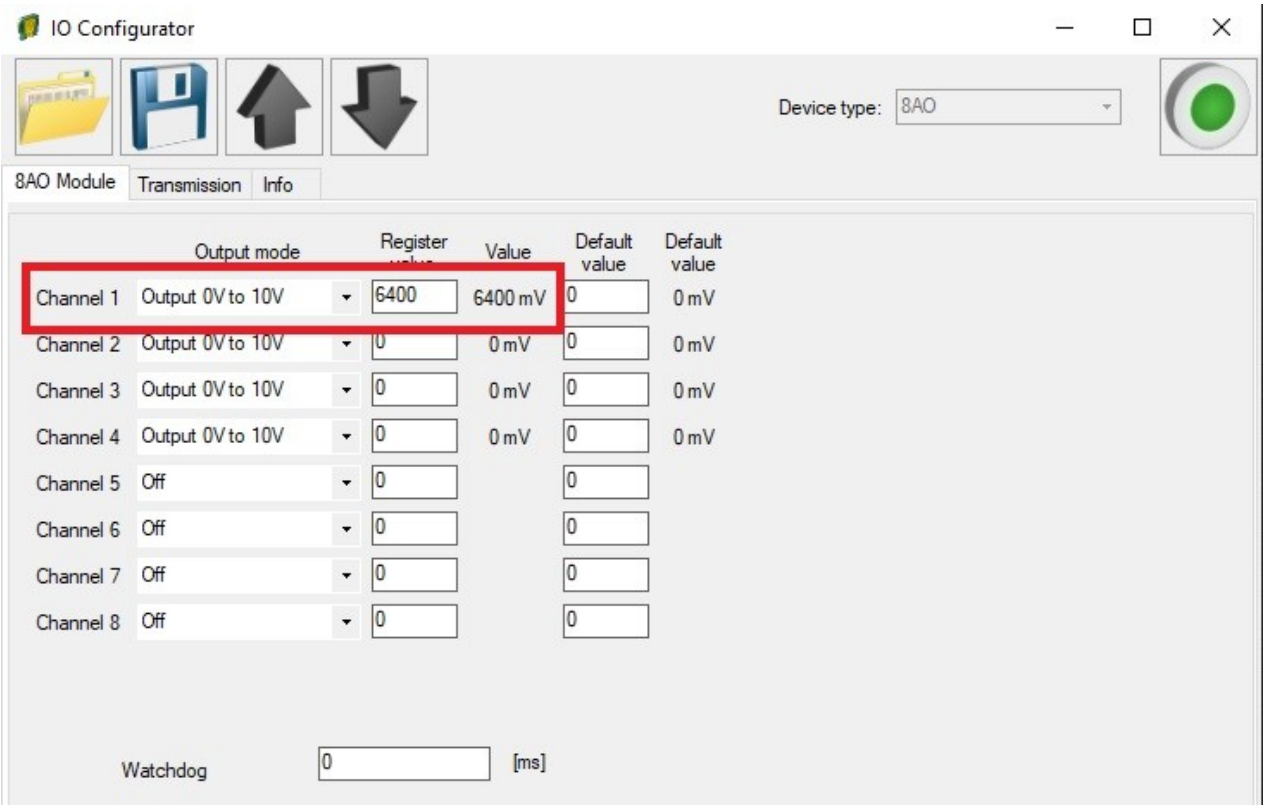

6.1. Measure the output voltage on channel 1 with a multimeter.

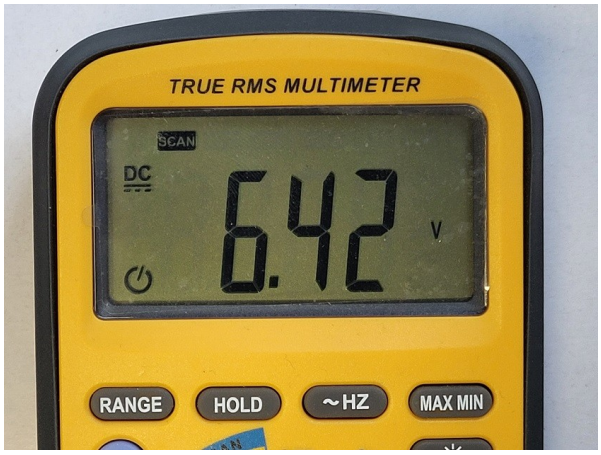

7. Set 4,0 VDC on channel 1 using **Modbus** protocol. Channel 1 is configured as 0-10VDC. The range of register is: 0-10000. This means that the register value should be **4000** to get **4VDC** at the analog output.

7.1. Set communication parameters in IO Configurator (MOD-8AO is a Modbus slave, client)

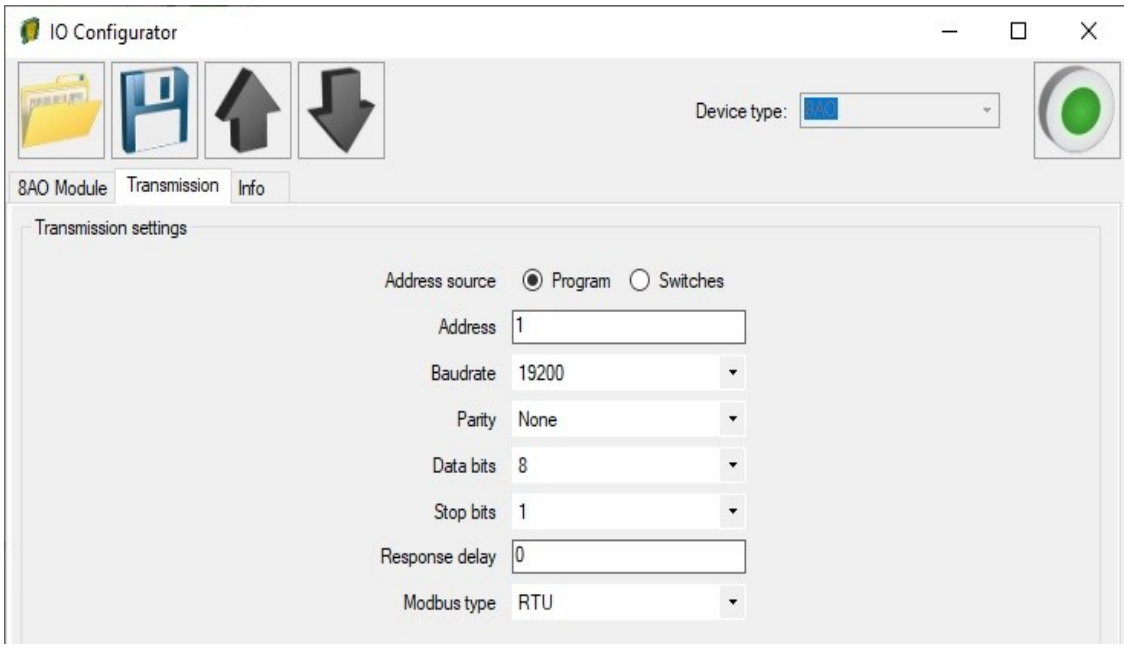

7.2. Set communication parameters in your **Master Device** (Baudrate, parity, Data bits, Stop bits, Modbus type – the same, Address – other).

7.3. Disconnect IO Configurator

7.4. Connect MOD-8AO with your Master Device by RS485:

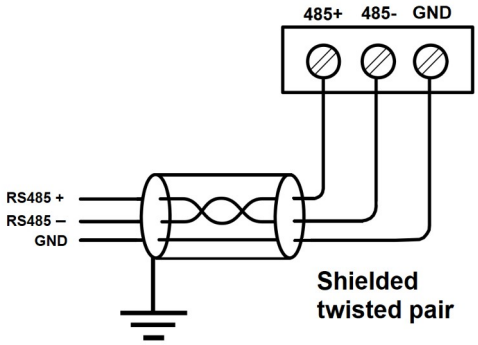

7.5. Master Device: Send a query to MOD-8AO – write value of analog output AO 1 (Channel 1). Use Modbus function - **Write Single Register 06.** Address of the register analog output 1 (AO 1): **52** (dec) or **34** (hex). New register value – 4000.

40053	52	0x34	Analog output 1	Read & Write	Value of analog output: in mV for voltage output (max 10240) in µA for current output 0 - 20mA (max 20480) in ‰ for current output 4-20mA (max 1000)
40054	53	0x35	Analog output 2	Read & Write	
40055	54	0x36	Analog output 3	Read & Write	
40056	55	0x37	Analog output 4	Read & Write	
40057	56	0x38	Analog output 5	Read & Write	
40058	57	0x39	Analog output 6	Read & Write	
40059	58	0x3A	Analog output 7	Read & Write	
40060	59	0x3B	Analog output 8	Read & Write	

In this example Modbus Master Device is software – QModMaster:

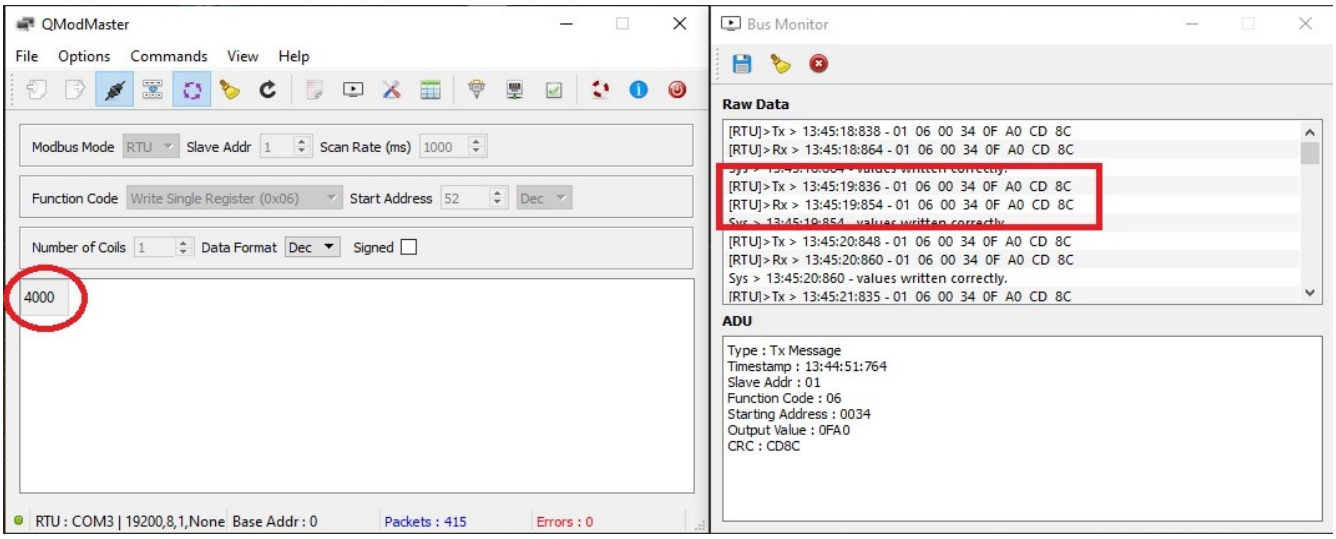

7.6. View of communication frame:

A. query to MOD-8AO:

01 06 00 **34** 0F AO CD 8C

B. answer from MOD-8AO

01 06 00 34 **0F A0** CD 8C

0F A0 (hex) = **4000** (dec)

7.7. The new value of register 52 (dec) – AI 1 – analog output 1 is: **4000**.
4000 =4,00VDC

7.8. Measure the output voltage on channel 1 with a multimeter.

8. Connection of the voltage output.