CURRENT output configuration and connecting with MOD-8AO by RS485 Modbus.

1. Open **MOD-8AO**:

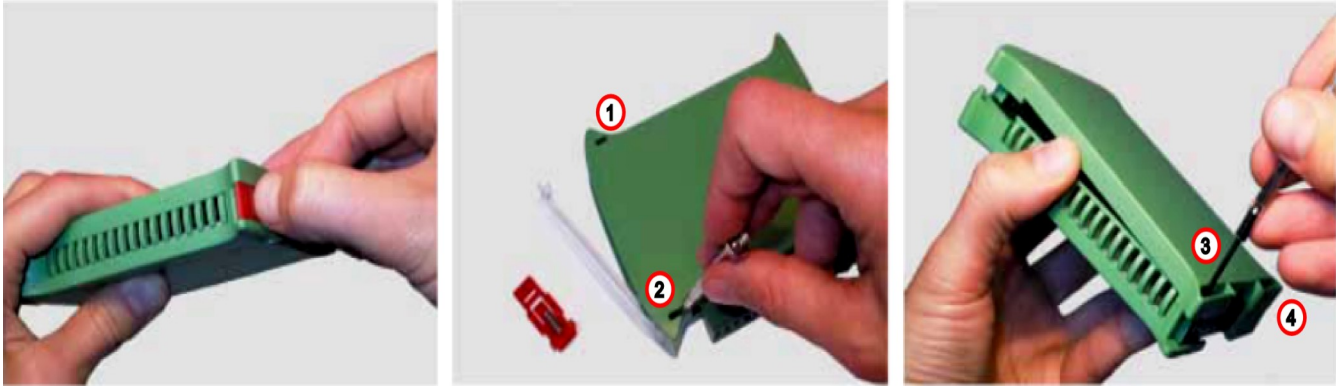

2. Set jumpers to **Current** outputs. The channel with current output must have shorted jumpers marked as current "**I**"

Location of the jumpers

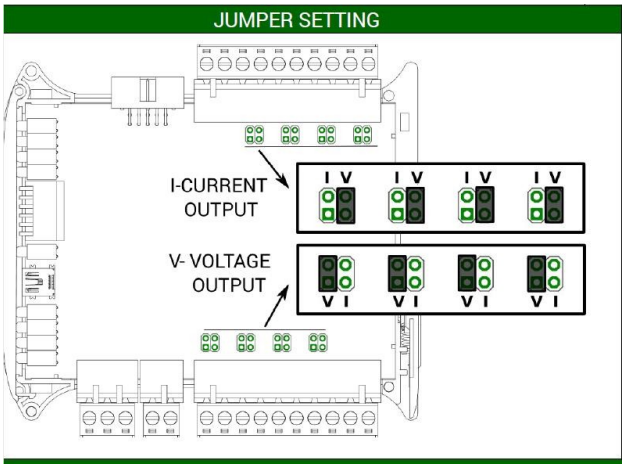

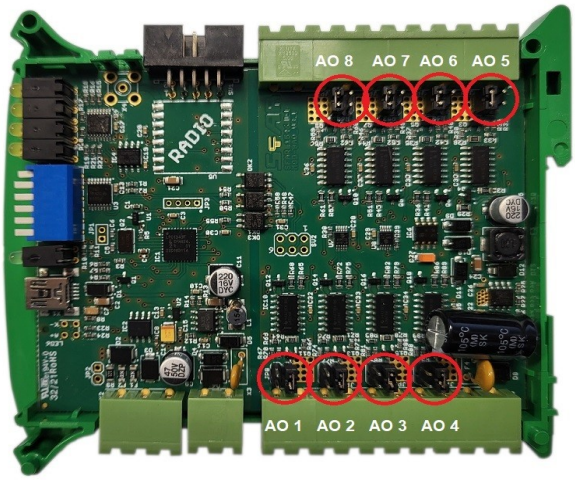

View of the shorted jumpers in the "I" position

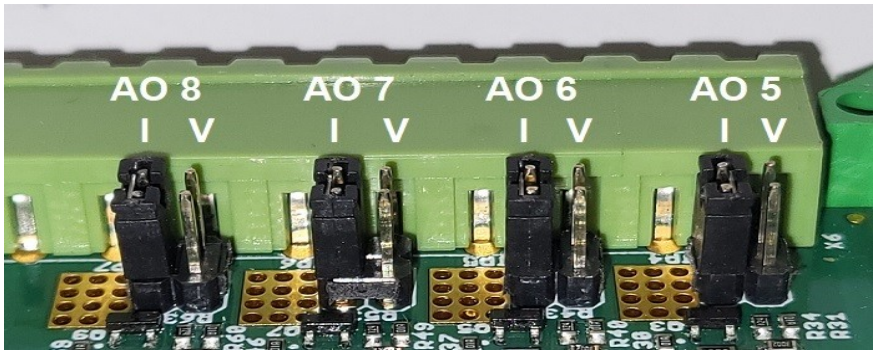

3. Close **MOD-8AO**

4. Connect
   A. power supply:

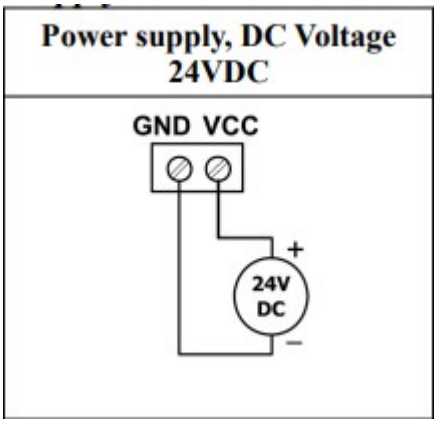

   B. power supply of analog outputs

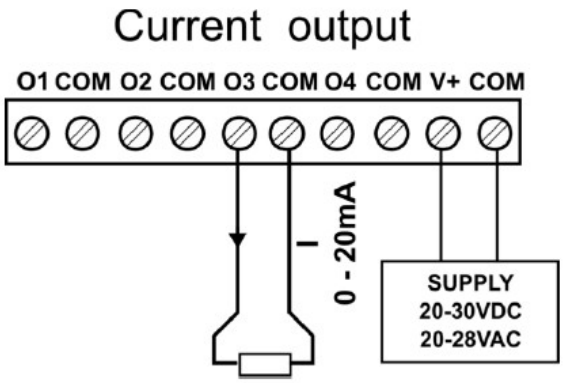

5. Connect MOD-8AO by USB cable to IO Configurator and set type of output.

Link to download:
https://www.aspar.com.pl/katalogi/IOMODULES/KONFIGURATOR/software/Konfigurator_IO.zip

The IO Configurator allows to set two type of current outputs:

- 0mA to 20mA
- 4mA to 20mA

The MOD-8AO module has two type of current output mode with two different register values ranges.

0mA - 20mA	Register value - range: 0 - 20000
4mA - 20mA	Register value - range: 0 - 1000

Examples

mode 4-20mA	register value: 0	output value: 4mA
mode 0-20mA	register value: 0	output value: 0mA
mode 4-20mA	register value: 500	output value: 12mA
mode 0-20mA	register value: 500	output value: 0,5mA
mode 4-20mA	register value: 1000	output value: 20mA
mode 0-20mA	register value: 1000	output value: 1mA
mode 0-20mA	register value: 8000	output value: 8mA
mode 0-20mA	register value: 10000	output value: 10mA
mode 0-20mA	register value: 20000	output value: 20mA

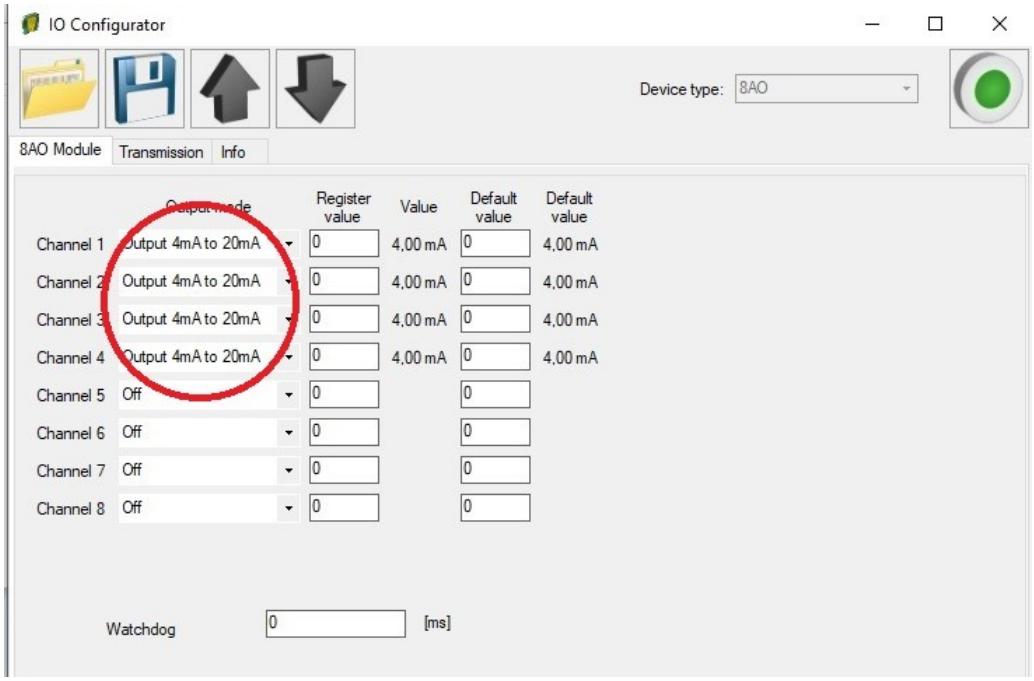

6. Set 12mA on channel 4 using IO Configurator. Channel 4 is configured as 4-20mA. The range of register is: 0-1000. This means that the register value should be **500** to get **12mA** at the analog output.

mode 4-20mA register value: 500 output value: 12mA

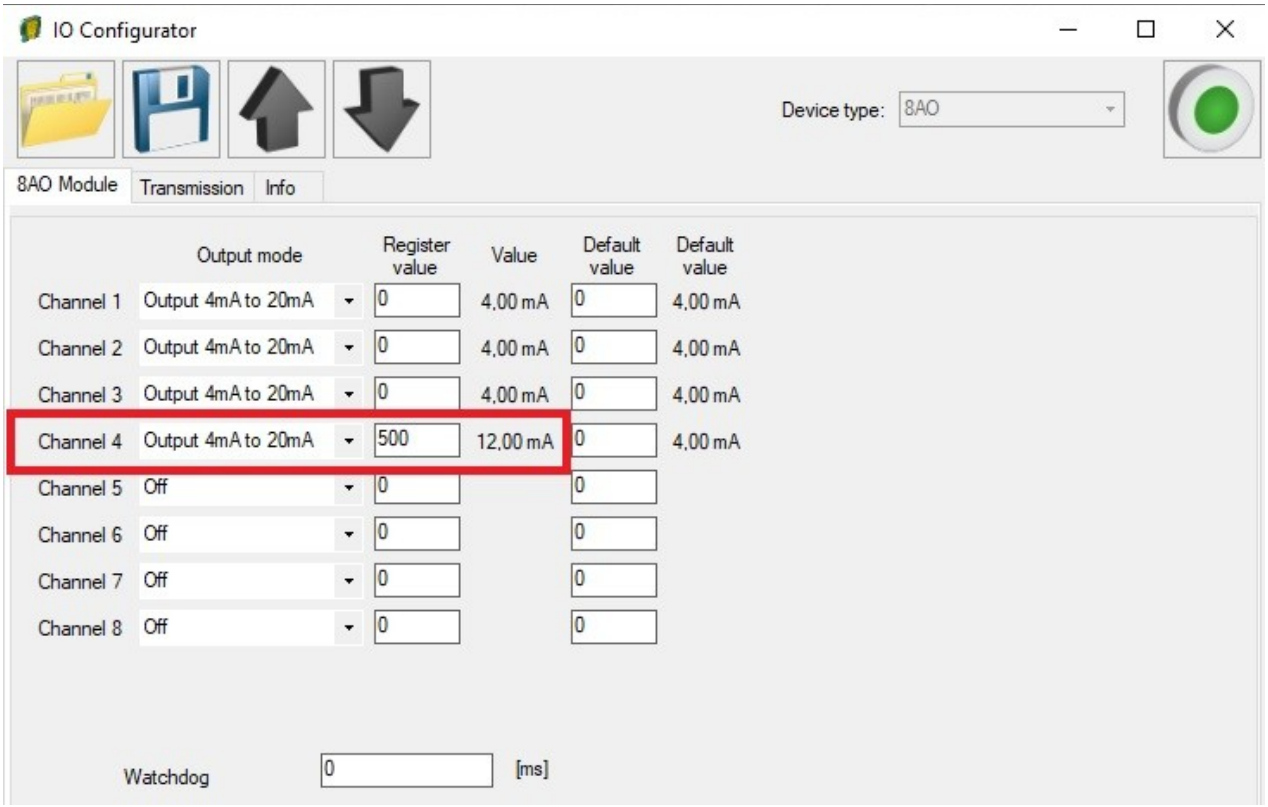

6.1. Measure the output current on channel 4 with a multimeter.

7. Set 8mA on channel 1 using **Modbus** protocol. Channel 1 is configured as 4-20mA. The range of register is: 0-1000. This means that the register value should be **250** to get **8mA** at the analog output.

7.1. Set communication parameters in IO Configurator (MOD-8AO is a Modbus slave, client)

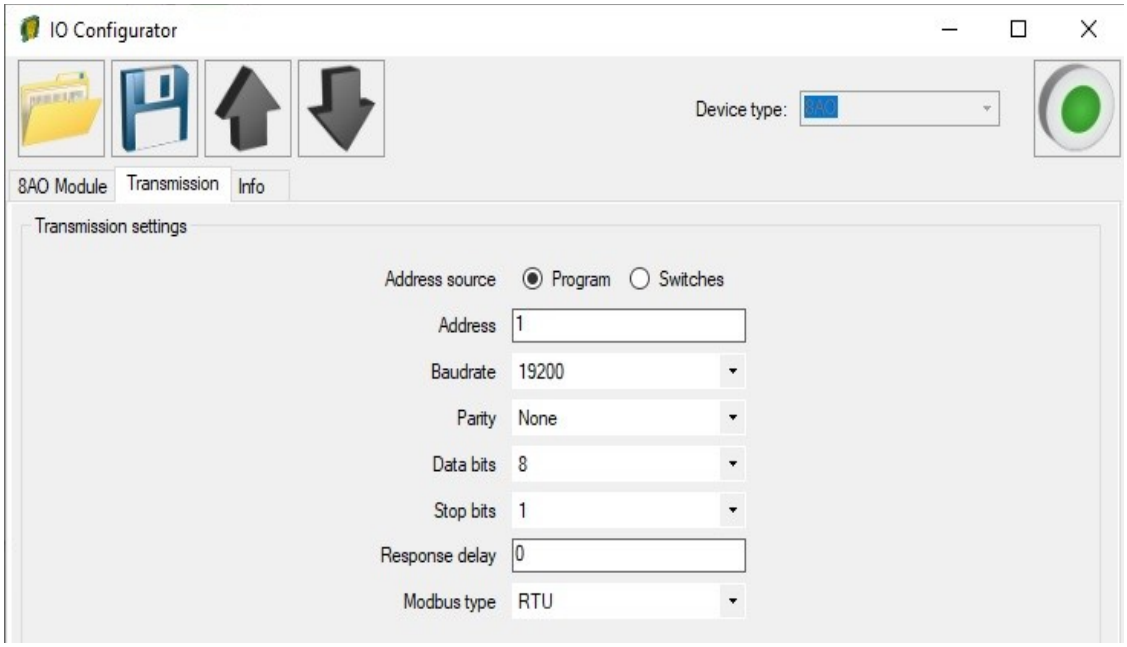

7.2. Set communication parameters in your **Master Device** (Baudrate, parity, Data bits, Stop bits, Modbus type – the same, Address – other).

7.3. Disconnect IO Configurator

7.4. Connect MOD-8AO with your Master Device by RS485:

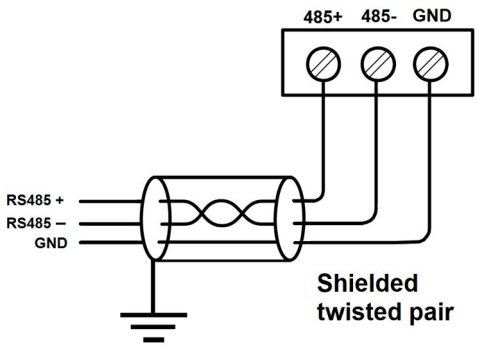

7.5. Master Device: Send a query to MOD-8AO – write value of analog output AO 1 (Channel 1). Use Modbus function - **Write Single Register 06.** Address of the register analog output 1 (AO 1): **52** (dec) or **34** (hex). New register value – 250.

40053	52	0x34	Analog output 1	Read & Write	Value of analog output: in mV for voltage output (max 10240) in µA for current output 0 - 20mA (max 20480) in ‰ for current output 4-20mA (max 1000)
40054	53	0x35	Analog output 2	Read & Write	
40055	54	0x36	Analog output 3	Read & Write	
40056	55	0x37	Analog output 4	Read & Write	
40057	56	0x38	Analog output 5	Read & Write	
40058	57	0x39	Analog output 6	Read & Write	
40059	58	0x3A	Analog output 7	Read & Write	
40060	59	0x3B	Analog output 8	Read & Write	

In this example Modbus Master Device is software – QModMaster:

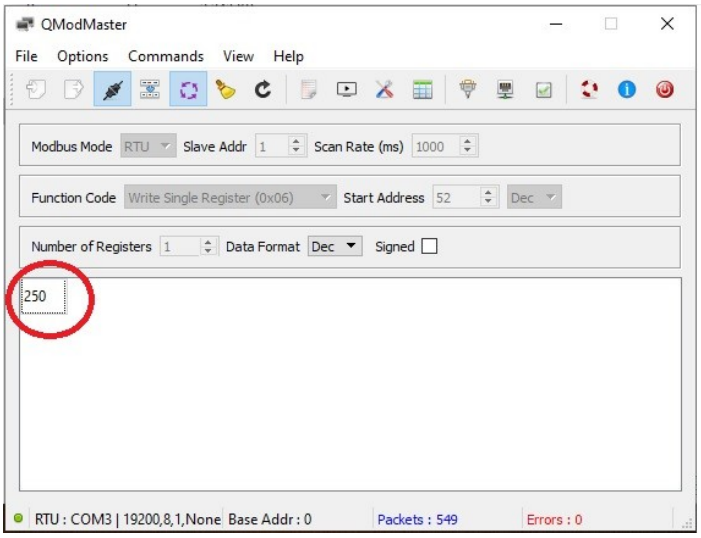

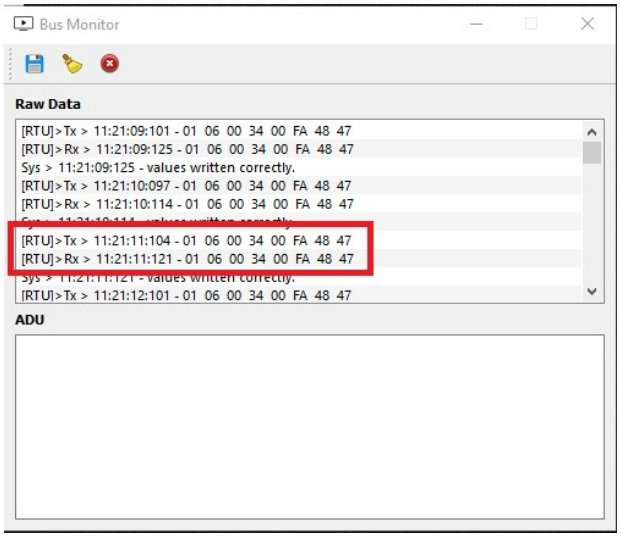

7.6. View of communication frame:

A. query to MOD-8AO:

01 06 00 **34** 00 FA 48 47

B. answer from MOD-8AO

01 06 00 34 **00 FA** 48 47

00 FA (hex) = 250 (dec)

7.7. The new value of register 52 (dec) – AI 1 – analog output 1 is: **250**.
250 =8,00mA

7.8. Measure the output current on channel 1 with a multimeter.

8. Connection of the current output.